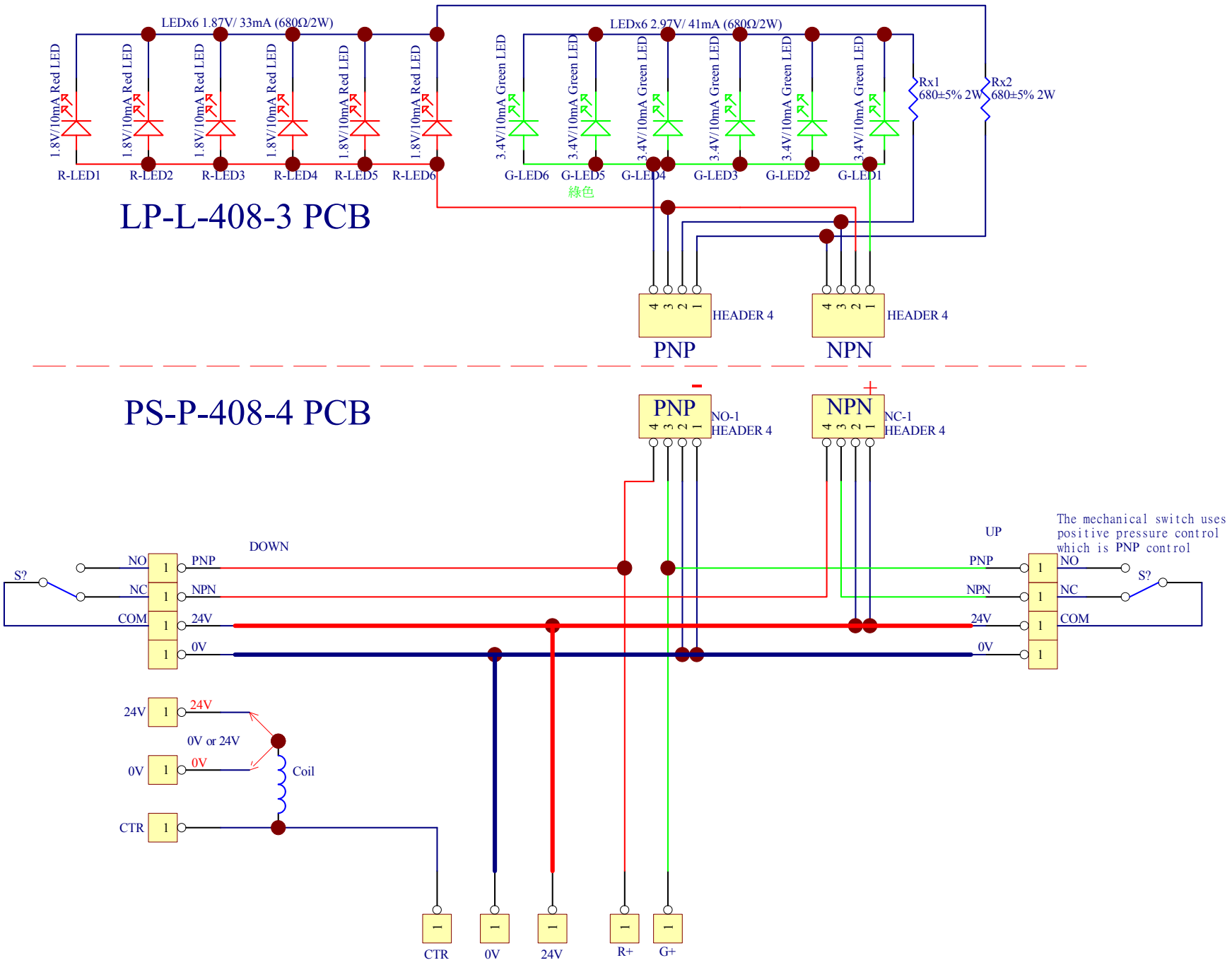
LEDx6 1.87V/ 33mA (680Ω/2W)
LEDx6 2.97V/ 41mA (680Ω/2W)
1.8V/10mA Red LED
3.4V/10mA Green LED
R-LED1
R-LED2
R-LED3
R-LED4
R-LED5
R-LED6
G-LED6
G-LED5
G-LED4
G-LED3
G-LED2
G-LED1
綠色
Rx1
680±5% 2W
Rx2
680±5% 2W
LP-L-408-3 PCB
HEADER 4
PNP
NPN
PS-P-408-4 PCB
NO-1
NC-1
DOWN
UP
S?
NO
NC
COM
PNP
NPN
24V
0V
The mechanical switch uses positive pressure control which is PNP control
0V or 24V
Coil
CTR
R+
G+